APP12-AA9

9" ANGLE REFLECTOR, 12" L RIGID PIPE

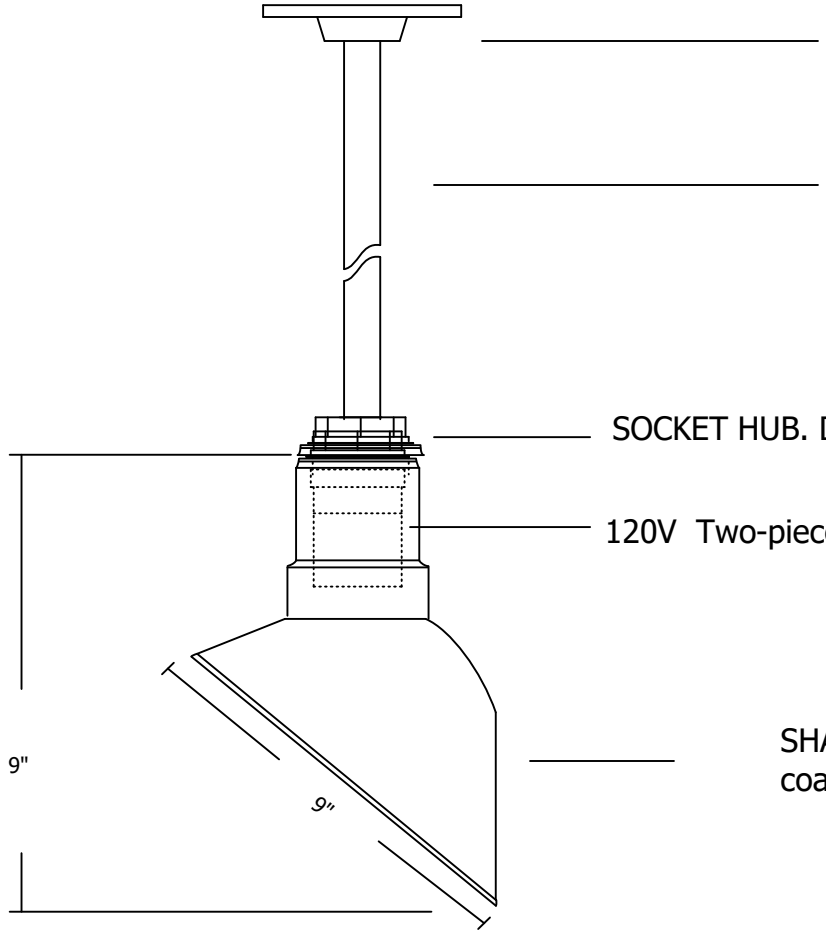

ACN004. Heavy duty aluminum box cover for flat ceiling.

APP12"01. 1/2" diameter 12" long rigid pipe. (SPECIFY LENGHT IF NEEDED)

SOCKET HUB. Die cast aluminum with 1/2" N.P.T. (SPECIFY 3/4" IF NEEDED)

120V Two-piece heavy duty ceramic medium base socket

SHADE 9" Diameter. Heavy gauge cold rolled steel cadmium plated and coated with genuine powder coat.

Tel: 310-323-2275 Fax: 310-323-6275
Website :www.arklighting.com Email :info@arklighting.com